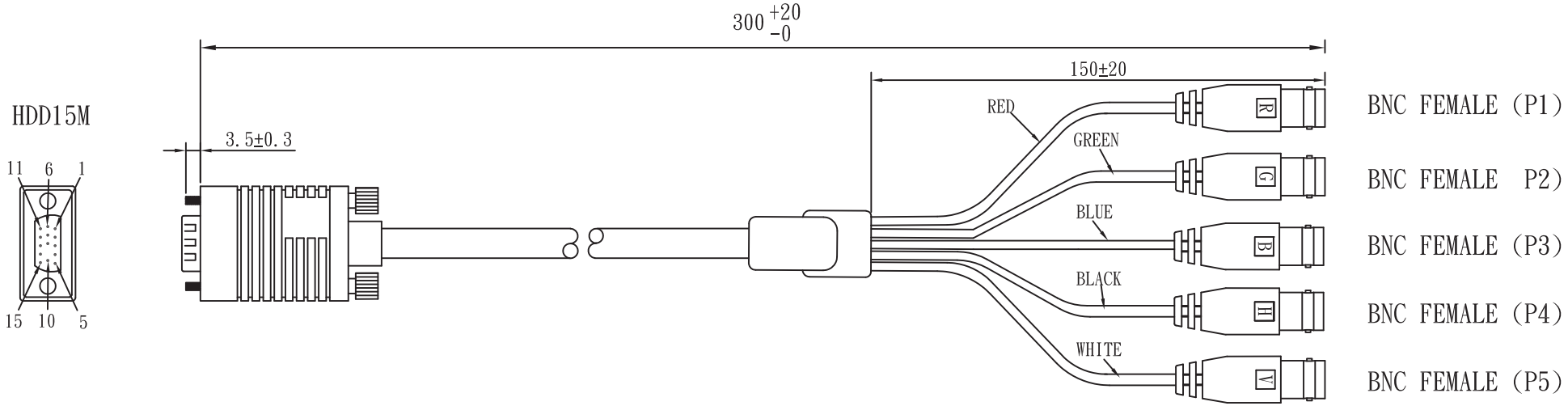

PIN ASSIGNMENTS

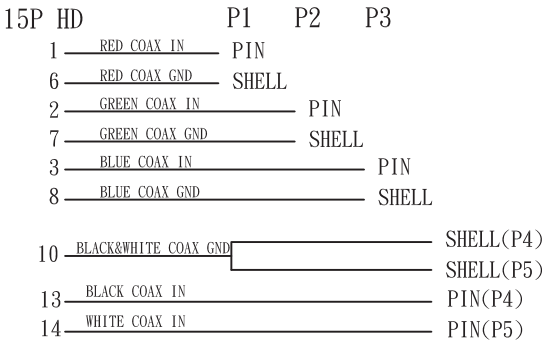

NOTES:

1. 100%OPEN, SHORT & MISWIRE TEST.
2. PAY ATTENTION TO PIN ASSIGNMENTS.

TOLERANCES	REVISIONS				COMPONENT NO : CC-01 ROHS	Arvanics Corporation.		
	REV	DESCRIPTION	DATE	APPVD.				
X . + mm − mm					APPROVED :			
X .X + mm − mm						TITLE :		
X .XX + mm − mm					CHECKED :	REQUIRED DOCUMENTS : *		
X .XXX + mm − mm						SCALE : 1 : 1	SHELLT : 1 / 1	REV : 1
					DRAWN :	DRAWING :		
METRIC (mm)					DATE :	FILE :		